Suction Line Accumulators

Series 1

Part No.	Connections (Inch)	A (Inch)	B (Inch)
SR-204	1 /2	4.00	8.38
SR-205	5 /8	4.00	10.63
SR-206	3 /4	5.50	10.25
SR-207	7 /8	5.50	12.50
SR-208	1-1/8	6.50	15.63
SR-209	1-3/8	6.50	20.63
SR-210	1-5/8	6.50	22.63

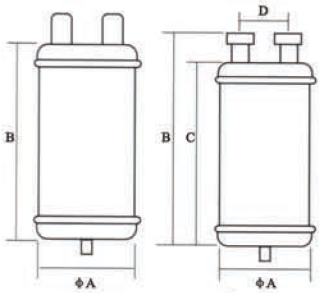

Series 2

Part No.	Connections (Inch)	A (Inch)	B (Inch)	C (Inch)	D (Inch)
SR-596	3/4	5	9.65	8.50	2.75
SR-597	7/8	5	9.76	8.50	2.75
SR-5126	3/4	5	12.76	11.61	2.75
SR-5127	7/8	5	12.99	11.77	2.75
SR-5137	7/8	5	14.65	13.39	2.75
SR-5139	1-1/8	5	14.80	13.39	2.75
SR-5179	1-1/8	5	18.39	16.93	2.75
SR-51711	1-3/8	5	18.43	16.93	2.75
SR-61411	1-3/8	6	15.24	13.74	2.94
SR-62013	1-5/8	6	21.89	20.28	2.94

SR Refrigerant Heat Exchanger Suction Accumulator

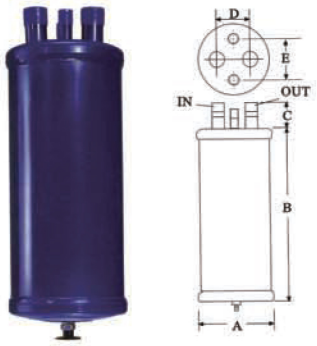

Part No.	Suction Line ODF(Inch)	Liquid Line DOF(Inch)	A (Inch)	B (Inch)	C (Inch)	D (Inch)	E (Inch)	Norminal Ref. Capacity		
								R-134a	R22	R404-R507
SR-2404	1 /2	3 /8	4	8.47	1.38	2.08	2.37	3.0	2.7	2.8
SR-2405	5/8	3/8	4	10.83	1.38	2.12	2.37	4.4	4.0	4.2
SR-2406	3/4	1/2	5.5	10.24	1.58	3.14	2.72	6.5	6.0	6.1
SR-2407	7/8	1/2	5.5	12.60	1.58	3.19	2.72	8.5	7.8	8.0
SR-2411	1-1/8	5/8	6.5	15.75	1.96	3.11	2.74	13.5	12.0	12.5
SR-2413	1-3/8	3/4	6.5	20.87	2.16	3.31	3.15	18.0	16.5	17.0
SR-2415	1-5/8	7/8	6.5	22.84	2.36	3.23	3.19	23.0	21.0	22.0
SR-2417	2-1/8	1-1/8	6.5	22.64	3.19	3.23	3.23	-	-	-

Refrigerat Accumulator

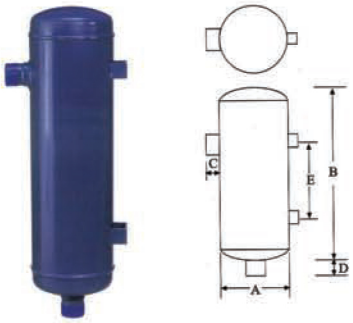

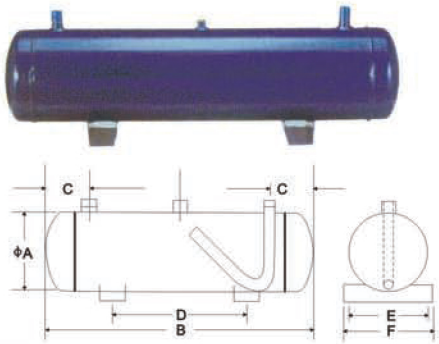

Part No.	Dimensions(Inch)					
	Cnnections ODF	A	B	C	D	E
RA-221	2 1/8	8.5	29.53	2.36	2.36	16.93
RA-225	5 5/8	8.5	33.47	2.95	2.95	16.93
RA-231	3 1/8	10.75	27.96	2.85	2.95	16.93

Part No.	Dimensions(Inch)					
	Connections ODS	A	B	C	D	E
RA-221	2 1/8	8 1/2	29.53	6.89	7.5	8.66
RA-225	2 5/8	8 1/2	33.47	6.89	7.5	8.66
RA-231	3 1/8	10 3/4	27.96	8.27	7.5	8.66