The BA/BN series is a balanced ported valve. Typical applications include: refrigerated cases, coolers, freezers, ice machines and air conditioning systems. BA/BN valves operate over widely varying operating conditions.

Features

- Stainless steel power element eliminates corrosion and prevents valve failure
- Hermetic, leak-free construction
- Compact size allows installation in limited spaces
- Bi-Flow capability allows one valve to control the superheat in both cooling and heating modes for heat pump applications
- Balanced port construction compensates for changes in operating pressures due to varying ambients, gas defrost, heat reclaim, or widely varying evaporator loads

Specifications

- Maximum working pressure: 700 psig

Options

- ZW195 charge available for R-410A systems
- External or internal equalizer
- Bleed type pressure equalization available to accommodate PSC type compressors
- SAE or ODF connections standard – Chatleff or Aeroquip are available
- Adjustable or non-adjustable superheat

Nomenclature example: BAEB 1/2 HCA 5 FT 3/8 x 1/2 ODF S/T

B	A	E	B	1/2	H	CA	5 FT	3/8 x 1/2	ODF	S/T
Valve Series Hermetic Balanced Port Design	**Superheat Adjustment** A = Adjustable N = Non-Adjustable	**Equalizer** E=External (Omit for Internal)	**Bleed Hole** (optional) (Omit for no bleed hole)	**Capacity** Nominal Rating in Tons (See nominal capacity table below)	**Refrigerant Code** +F = R-12 • H = R-22 +M = R-134a • N = R-407C *P = R-507 *R = R-502 *S = R-404A Z = R-410A	**Charge Code** C = medium temp CA = heat pump W(MOP) = press. limiting Z = low temp	**Capillary Tube Length** 30 IN & 5 FT (std)	**Inlet x Outlet Connection Sizes** 1/4 x 3/8 3/8 x 1/2 1/2 x 5/8 5/8 x 7/8	**Connection Type** SAE=flare ODF = solder	**Configuration** S/T = straight-thru ANG = 90° angle

+ = R-12 and R-134a are interchangeable refrigerant charges
* = R-507, R-502 and R-404A are interchangeable refrigerant charges
• = R-22 and R-407C are interchangeable refrigerant charges

BA/BN Series – Nominal* Capacity Table in Tons (kW)

R-12	R-134a	R-22/R-407C	R-410A	R-502/R-404A/R-507
1/4 (0.9)	1/2 (1.8)	1/2 (1.8)	1/2 (1.8)	1/4 (0.9)
1/2 (1.8)	3/4	1 (3.5)	1 (3.5)	1/2 (1.8)
1 (3.5)	1 (3.5)	1½ (5.3)	1½ (5.3)	1 (3.5)
1¼ (4.4)	1½ (5.3)	2 (7.0)	2 (7.0)	1¼ (4.4)
1½ (5.3)	2 (7.0)	2½ (9.0)	3 (11.0)	1½ (5.3)
2 (7.0)	2¼ (8.0)	3 (11.0)	3½ (12.0)	2 (7.0)
2½ (9.0)	3 (11.0)	4 (14.0)	4½ (16.0)	2½ (9.0)
3 (11.0)	3½ (12.0)	5 (17.0)	6 (21.0)	3 (11.0)
3½ (12.0)	3½ (12.0)	6 (21.0)	7½ (26.0)	4 (14.0)

All capacities shown are at 100°F condensing, 40°F evaporator temperature.
*See Extended Capacity Tables for ratings at a wide range of conditions per ARI standard 750

BA/BN Dimensional Data (in)

BAE							
Connection Size		A	B	C MIN	D MIN	E	F
Inlet	Outlet						
1/4 ODF	3/8 ODF	0.25	0.38	0.31	0.32	1.70	1.73
3/8 ODF	3/8 ODF	0.38	0.38	0.32	0.32	1.73	1.73
3/8 ODF	1/2 ODF	0.38	0.50	0.32	0.41	1.73	1.73
1/2 ODF	1/2 ODF	0.50	0.50	0.41	0.41	1.73	1.73
1/2 ODF	5/8 ODF	0.50	0.63	0.41	0.50	1.73	1.75
5/8 ODF	5/8 ODF	0.63	0.61	0.50	0.50	1.75	1.75
5/8 ODF	7/8 ODF	0.63	0.88	0.50	0.62	1.75	1.73

BA(E) Dimensional Diagram

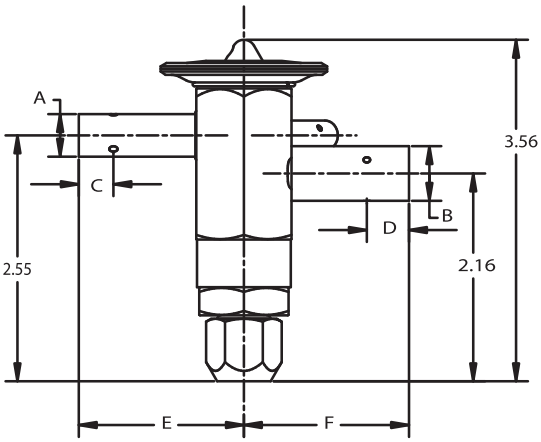

ODF CONNECTIONS
STRAIGHT–THRU CONFIGURATION ONLY

BN(E) Dimensional Data (in)

Connection Size		A	B	C MIN	D MIN	E	F
Inlet	Outlet						
1/4 ODF	3/8 ODF	0.25	0.38	0.31	0.32	1.70	1.73
3/8 ODF	3/8 ODF	0.38	0.38	0.32	0.32	1.73	1.73
3/8 ODF	1/2 ODF	0.38	0.50	0.32	0.41	1.73	1.73
1/2 ODF	1/2 ODF	0.50	0.50	0.41	0.41	1.73	1.73
1/2 ODF	5/8 ODF	0.50	0.63	0.41	0.50	1.73	1.75
5/8 ODF	5/8 ODF	0.63	0.61	0.50	0.50	1.75	1.75
5/8 ODF	7/8 ODF	0.63	0.88	0.50	0.62	1.75	1.73

BN(E) Dimensional Diagram

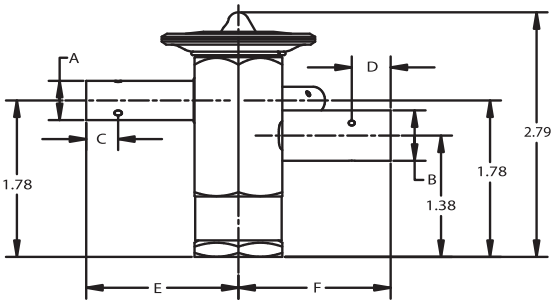

ODF CONNECTIONS
STRAIGHT–THRU CONFIGURATION ONLY

Remote Bulb Tubing Length 30” or 5’ Standard

BA(E) & BN(E) Remote Bulb Dimensions		
Refrigerant Charge	Length	Diameter
HCA, HAA	2.31	0.75
MC, MZ, MW (MOP), RW (MOP)	2.09	0.50
RC, SC, SZ, SW (MOP),		
PC, PZ, PW (MOP)		

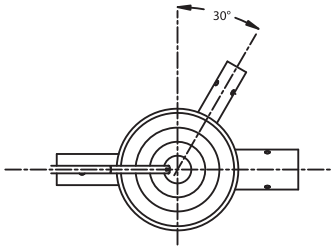

TOP VIEW SHOWING
EXTERNAL EQUALIZER LOCATION

Ordering Information

Refrigerant	Series	Tons*	Charge	Connections	Cap Tube	PCN
R-410A	BAE	1-1/2	ZW195	3/8 X 1/2 ODF S/T	5 FT	065876
		2	ZW195	3/8 X 1/2 ODF S/T	5 FT	065877
		3	ZW195	3/8 X 1/2 ODF S/T	5 FT	065878
		4-1/2	ZW195	3/8 X 1/2 ODF S/T	5 FT	065880
		6	ZW195	1/2 X 3/8 ODF S/T	5 FT	065586
		7-1/2	ZW195	5/8 X 7/8 ODF S/T	5 FT	066088
	BAEB	1-1/2	ZW195	3/8 X 1/2 ODF S/T	5 FT	065336
		2	ZW195	3/8 X 1/2 ODF S/T	5 FT	065337
		3	ZW195	3/8 X 1/2 ODF S/T	5 FT	065338
		4-1/2	ZW195	3/8 X 1/2 ODF S/T	5 FT	065339
		6	ZW195	3/8 X 1/2 ODF S/T	5 FT	065340
			ZW195	1/2 X 3/8 ODF S/T	5 FT	065978
R-134a R-12	BAE	3/4	MC	3/8 X 1/2 ODF S/T	30 IN	062754
		1	MC	3/8 X 1/2 ODF S/T	30 IN	061967
		1-1/2	MC	3/8 X 1/2 ODF S/T	30 IN	063129
		2	MC	3/8 X 1/2 ODF S/T	30 IN	062830
		3	MC	3/8 X 1/2 ODF S/T	30 IN	063201
R-22 R-407C	BAE	1	HCA	3/8 X 1/2 ODF S/T	30 IN	063200
		1-1/2	HCA	3/8 X 1/2 ODF S/T	30 IN	061954
			HW100	3/8 X 1/2 ODF S/T	30 IN	062831
		2	HCA	3/8 X 1/2 ODF S/T	30 IN	061955
			HCA	1/2 X 1/2 ODF S/T	5 FT	063018
		2-1/2	HCA	3/8 X 1/2 ODF S/T	30 IN	061956
			HCA	1/2 X 5/8 ODF S/T	30 IN	061962
			HW100	3/8 X 1/2 ODF S/T	30 IN	062616
		3	HCA	3/8 X 1/2 ODF S/T	30 IN	061957
			HCA	1/2 X 5/8 ODF S/T	5 FT	063019
			HW100	3/8 X 1/2 ODF S/T	30 IN	062372
		4	HCA	3/8 X 1/2 ODF S/T	30 IN	061958
			HCA	1/2 X 5/8 ODF S/T	30 IN	061963
			HCA	5/8 X 5/8 ODF S/T	5 FT	063020
			HW100	3/8 X 1/2 ODF S/T	30 IN	062373
		5	HCA	3/8 X 1/2 ODF S/T	5 FT	062839
			HCA	1/2 X 1/2 ODF S/T	5 FT	062852
			HCA	1/2 X 5/8 ODF S/T	5 FT	061964
			HCA	5/8 X 5/8 ODF S/T	5 FT	062838
			HW100	3/8 X 1/2 ODF S/T	30 IN	062374
		6	HCA	1/2 X 1/2 ODF S/T	5 FT	062853
			HCA	1/2 X 5/8 ODF S/T	5 FT	062736
	BNE	3	HCA	3/8 X 1/2 ODF S/T	5 FT	064166
			HCA	1/2 X 1/2 ODF S/T	5 FT	062289
		4	HCA	3/8 X 3/8 ODF S/T	30 IN	063132
			HCA	3/8 X 1/2 ODF S/T	30 IN	061971
		5	HCA	1/2 X 1/2 ODF S/T	5 FT	062290
			HCA	1/2 X 5/8 ODF S/T	5 FT	065226
	BAEB	1-1/2	HCA	3/8 X 1/2 ODF S/T	30 IN	062789
			HCA	1/2 X 1/2 ODF S/T	30 IN	063006
		2	HCA	3/8 X 1/2 ODF S/T	30 IN	062790
		3	HCA	3/8 X 1/2 ODF S/T	30 IN	061968
			HCA	1/2 X 1/2 ODF S/T	30 IN	063015
			HCA	1/2 X 5/8 ODF S/T	5 FT	063348
		4	HCA	3/8 X 1/2 ODF S/T	30 IN	063939
			HCA	1/2 X 1/2 ODF S/T	5 FT	063010
		5	HCA	3/8 X 1/2 ODF S/T	5 FT	061980
			HCA	1/2 X 1/2 ODF S/T	30 IN	063128
		6	HCA	1/2 X 1/2 ODF S/T	30 IN	063940
			HCA	1/2 X 5/8 ODF S/T	5 FT	064805
			HCA	5/8 X 5/8 ODF S/T	5 FT	065977

* For interchangeable refrigerant charges R-134a/R-12, R-404A/R-507/R-502, and R-22/R-407C, the tons of capacity shown in the table are for the first (primary) refrigerant listed. Consult the Nominal Capacity Table for determining the tons of capacity for the secondary refrigerants listed.
Example: A 1/4 ton R-12 valve is required. What R-134a ton valve should be selected? **Solution:** From the Nominal Capacity Table, a 1/2 ton R-134a valve is equivalent to a 1/4 ton R-12 valve.