Data Sheet

RoVent 10

Type: **AKSD 315-4 K.4DA A5**

Installation type 5 direction of airflow A with square nozzle plate

Part no.: E65-31542

Curve:

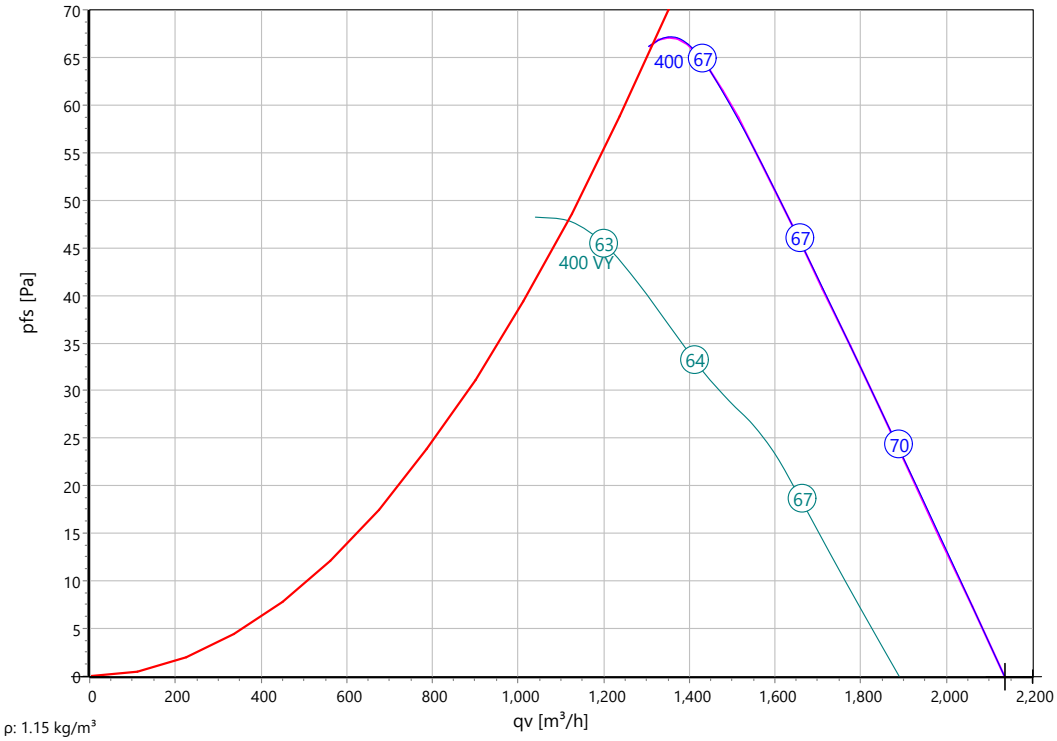

ρ: 1.15 kg/m³

Fan Energy Index:

according to AMCA 208-18		
FEI	2.21	

Operating Point:

q_V	2136	m³/h
p_{fs}	0	Pa
p_{fd}	32.6	Pa
$\eta_{e,fs}$	0	%
$\eta_{e,tot}$	21	%
P_e	0.0919	kW
I	0.28	A
n	1411	r/min
$L_WA_{A,IN}$	68	dB(A)
U	400	V
v	7.52	m/s
SFP	155	Ws/m³

Set point:

q_V	9545	m³/h	p_{fs}	0	Pa

Intersections:

Curve	q_V [m³/h]	p_{fs} [Pa]	P_e [kW]	I [A]	n_N [r/min]	$L_WA_{A,IN}$ [dB(A)]
400 VY	1889	10	0.058	0.1	1242	65
400 VD	2136	0	0.091	0.28	1411	68

Nominal Data:

U [V]	f [Hz]	C [µF]	P_e [kW]	I_N [A]	n_N [r/min]	t_R [°C]	k_{10} [m²s/h]	I_A / I_N	IP	m [kg]
400 D	50	-	0.11	0.29	1375	-25 .. +65	-	2.8	IP 54	-
400 Y			0.07	0.13	1160					

Sound Data:

Frequency	Σ		125Hz	250Hz	500Hz	1kHz	2kHz	4kHz	8kHz	Distances	1 m	4 m
LwA(A,in) [dB(A)]	68	-	50	58	64	62	62	60	50	LpA(A,in) [dB(A)]	61	51

P. C. HETZ LTD • hasadan St. Industrial 7 • il - 5881560 holon
Tel: +972 3 5582324 • Email: nr@pchetz.com • www.pchetz.com

Type: **AKSD 315-4 K.4DA A5**

Installation type 5 direction of airflow A with square nozzle plate

Part no.: E65-31542

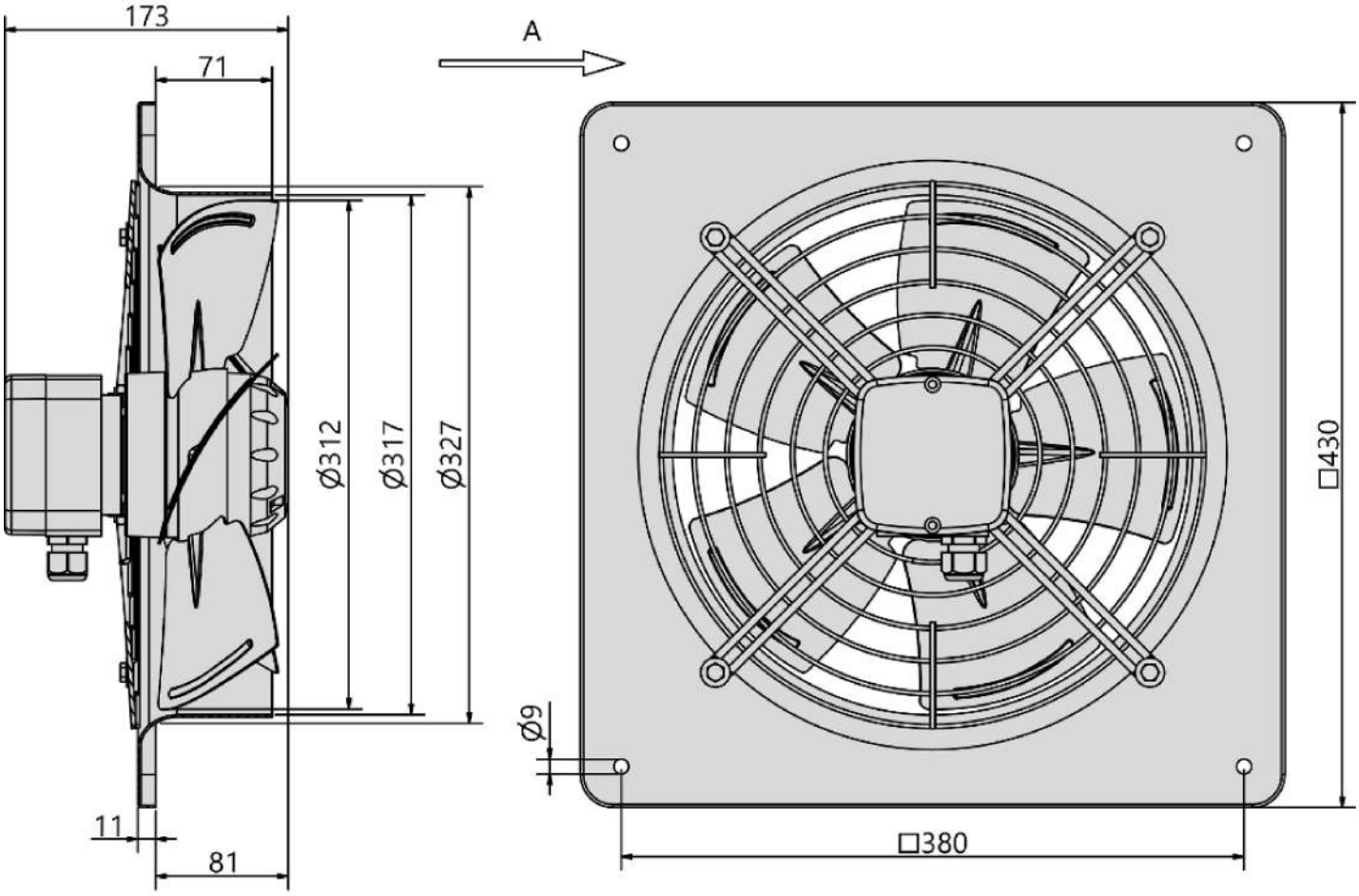

P. C. HETZ LTD • hasadan St. Industrial 7 • il - 5881560 holon
Tel: +972 3 5582324 • Email: nr@pchetz.com • www.pchetz.com